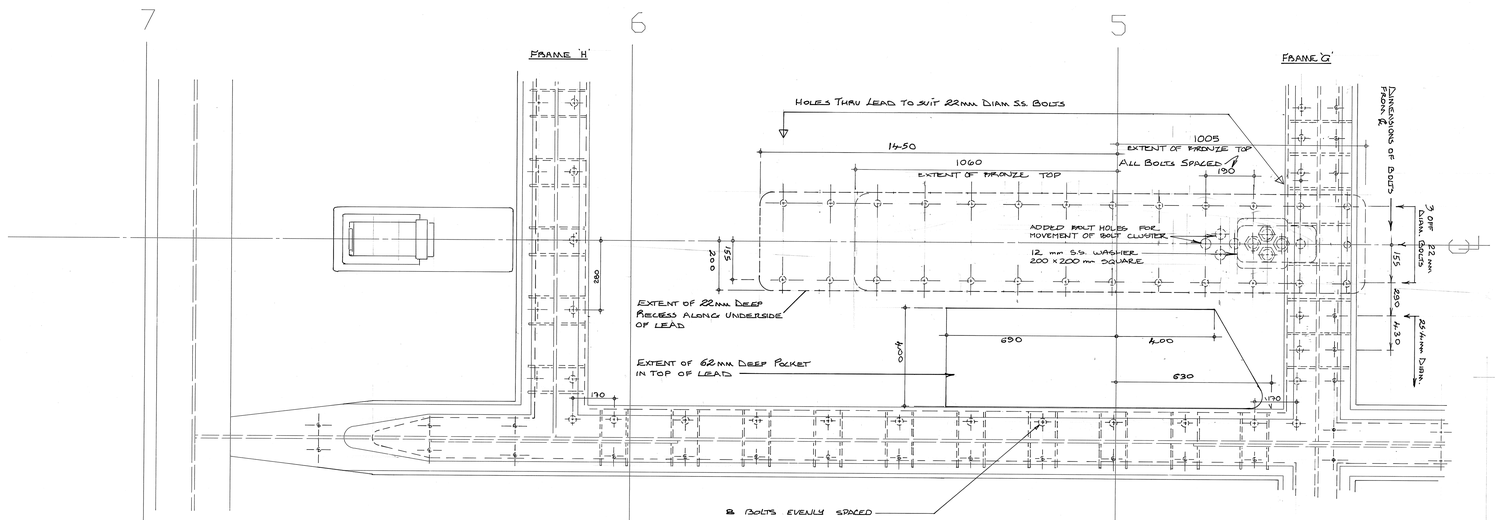

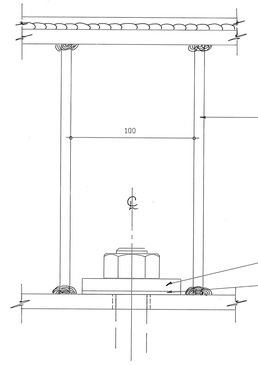

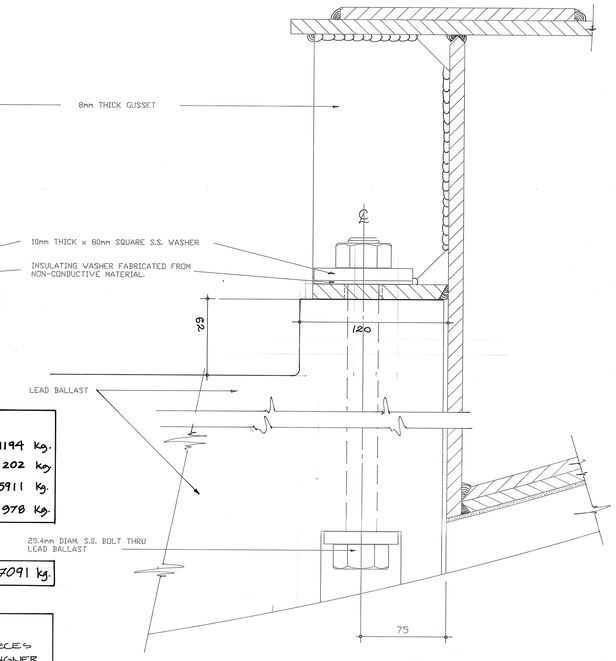

BALLAST :-

Wt OF LEAD BLOCK	11194 Kg.
Wt OF BRONZE TOP	202 Kg
Wt OF KEEL (BETWEEN -963 W.L. & -3241 W.L.)	5911 Kg.
Wt OF KEEL/BULB (BELOW -3241 W.L.)	978 Kg.

TOTAL KEEL Wt — 7091 Kg.

IMPORTANT NOTE :-
PLEASE CONFIRM ALL WTS. OF BALLAST PIECES AFTER THEIR MANUFACTURE & NOTIFY THE DESIGNER IMMEDIATELY SO THAT HE MAY ADJUST THE FLOTATION FOR IOR MEASUREMENT.

BALLAST BOLTING DETAIL: (TYPICAL)
SCALE: 1:2
SEE DRAWING No. 3,4,17 FOR DETAILS OF ALUM. FRAME.

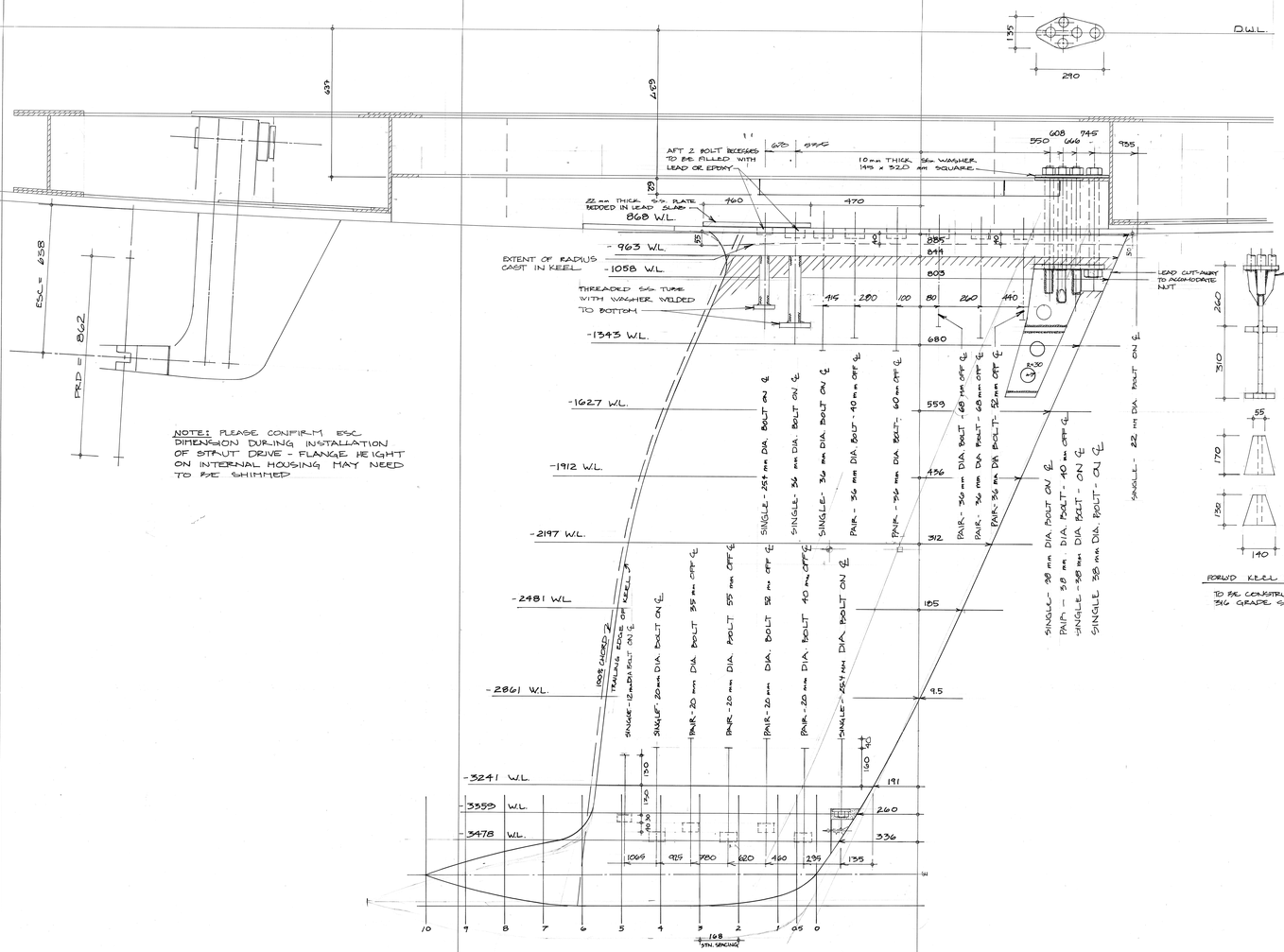

NOTE: PLEASE CONFIRM ESC DIMENSION DURING INSTALLATION OF STRUT DRIVE - FLANGE HEIGHT ON INTERNAL HOUSING MAY NEED TO BE SHIMMED

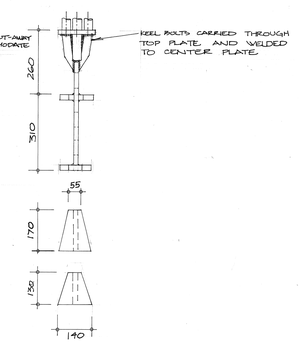

FORGED KEEL PLATE
TO BE CONSTRUCTED OF 316 GRADE STAINLESS STEEL

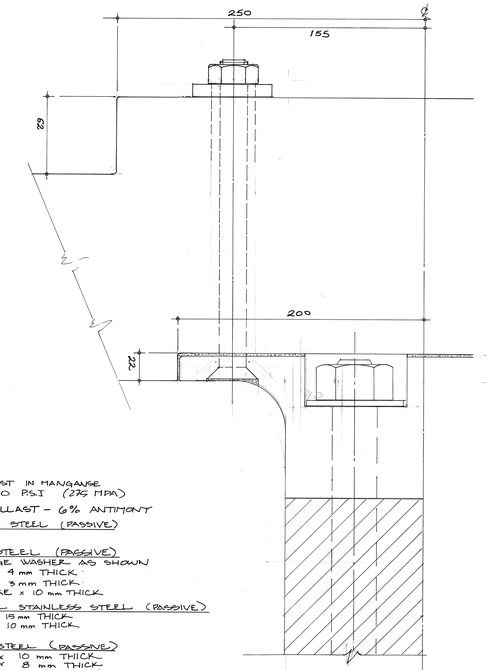

TOP OF KEEL ABOVE - 963 W.L. TO BE CAST IN MANGANESE ALUMINUM BRONZE - MIN YIELD 40,000 PSI (275 MPA)
LEAD KEEL - 4% ANTIMONY - LEAD BALLAST - 6% ANTIMONY
KEEL BOLTS: 316 GRADE STAINLESS STEEL (PASSIVE)
SIZES AS SHOWN ON DRAWING.

TOP OF KEEL — TOP WASHERS - 316 GRADE STAINLESS STEEL (PASSIVE)
38 mm DIA. BOLTS — SINGLE LARGE WASHER AS SHOWN
36 mm DIA. BOLTS — 175 mm DIA. x 9 mm THICK
25.4 mm DIA. BOLTS — 60 mm DIA x 5 mm THICK
22 mm DIA BOLTS — 60 mm SQUARE x 10 mm THICK

BOTTOM WASHERS IN LEAD - 316 GRADE STAINLESS STEEL (PASSIVE)
36 mm DIA. BOLTS — 70 mm DIA x 19 mm THICK
25.4 mm DIA. BOLTS — 65 mm DIA x 10 mm THICK

BULB — TOP WASHERS - 316 GRADE STAINLESS STEEL (PASSIVE)
25.4 DIA. BOLTS — 65 mm DIA x 10 mm THICK
20 mm DIA. BOLTS — 50 mm DIA x 8 mm THICK
12 mm DIA BOLTS — 30 mm DIA x 5 mm THICK

BOTTOM WASHER IN LEAD 316 GRADE STAINLESS STEEL PASSIVE)
25.4 DIA. BOLTS — CUT TO FIT LEADING EDGE x 10 mm THICK
20 mm DIA. BOLTS — 50 mm DIA x 8 mm THICK
12 mm DIA BOLTS — 30 mm DIA x 5 mm THICK

NOTE:
SELECT BRONZE ALLOY, KEEL BOLT STAINLESS STEEL AND LEAD TYPE TO MINIMIZE EFFECT OF GALVANIC CORROSION

REVISIONS
A:- LEAD BLOCK DETAILS ADDED MAR 05 1988
B:- CHANGE AFT 3RD OFF CENTER LINE DIMENSION. ADD MATERIAL SPECS

THE BUILDER MUST CHECK DIMENSIONS AND CONTENT GIVEN ON THE DRAWING AND ADVISE THE DESIGNER OF ANY DISCREPANCIES BEFORE COMMENCING CONSTRUCTION.
THIS DRAWING MUST NOT BE REPRODUCED OR USED FOR ANY PURPOSE, OTHER THAN IN CONJUNCTION WITH THE BOAT OR DESIGN FOR WHICH IT WAS DRAWN WITHOUT THE EXPRESS WRITTEN CONSENT OF THE DESIGNER.
THESE PLANS INCLUDES FEES FOR ONE BOAT ONLY FOR PERSONAL USE. NO ADDITIONAL BOATS SHALL BE BUILT FROM THESE PLANS WITHOUT THE DESIGNER'S WRITTEN CONSENT AND PAYMENT OF FEES.

BRUCE FARR® AND ASSOC., INC.
P.O. BOX 3457, ANNAPOLIS, MD. 21403, U.S.A.

MAXI YACHT
FOR - SORC & PIERRE FEHLMANN.

SCALE 1:10 & 1:2	DESIGN NO. 183
TITLE KEEL DETAILS & CONSTRUCTION	COPYRIGHT FEB 3 1988 © BRUCE FARR & ASSOC., INC.
CHECKED	DRAWING NO. 11B